股票简称：国林科技
股票代码：300786

GUOLIN®
消毒系列产品

真诚 求实 高效 创新

GUOLIN®

青岛国林环保科技股份有限公司
Qingdao Guolin Environmental Technology Co., Ltd

总 机：0532-84992387
地 址：青岛市瑞昌路168号　邮 编：266031
Email：guolin@china-guolin.com
网 址：www.china-guolin.com

销售热线：0532-83810299　84991738
客户服务专线：800-8600-113　400-6532-616

2020年第1版第1次印刷

全球臭氧系统供应商

Global Ozone System Supplier

青岛国林环保科技股份有限公司
Qingdao Guolin Environmental Technology Co., Ltd

目　录

Contents

公司简介 Brief Introduction ····· 01

企业文化 Guolin Culture ····· 03

荣誉资质 Honor ····· 04

国林大事记 History ····· 05

生产能力 Production Capacity ····· 07

核心技术体系 Core Technology ····· 09

臭氧应用领域介绍 Ozone Technology Application Area ····· 10

空间消毒 Space Disinfection ····· 11

净水消毒 Drinking Water Disinfection ····· 17

泳池水消毒 Swimming Pool Disinfection ····· 21

高浓度臭氧水 High Concentration Ozonated Water ····· 24

水产养殖 Aquaculture ····· 29

畜禽养殖 Poultry Breeding ····· 29

农业种植 Agriculture ····· 29

客户服务 Customer Service ····· 30

公司简介

青岛国林环保科技股份有限公司成立于1994年，是集科、工、贸于一体的高新技术企业，是臭氧产生机理研究、臭氧设备的设计与制造、臭氧应用工程方案设计、安装、调试、运行及维护的专业化公司，是国内臭氧行业的代表企业。公司于2019年7月23日正式登陆深交所创业板挂牌交易，证券简称：国林科技，证券代码：300786。

国林科技作为国内率先突破10kg/h、50kg/h、100kg/h、120kg/h大型臭氧发生器设计制造技术的企业，公司产品涵盖全系列臭氧发生器及臭氧系统设备，目前已广泛应用于市政给水深度处理、市政污水处理、工业废水处理、烟气脱硝、化工氧化等领域。

国林科技作为中国城镇建设行业标准《水处理用臭氧发生器》（CJ/T322-2010）负责起草单位，国家标准《水处理用臭氧发生器技术要求》（GB/T 37894-2019）负责起草单位，先后承担了国家十二五重大科技专项水专项中“非玻璃介质大型臭氧发生器设备研制及其产业化”课题；国家十三五重点研发计划“燃煤污染物（SO_2、NOx、PM）一体化控制技术工程示范项目”中的“基于前置臭氧氧化的NOx与SO_2协同吸收技术”课题；国家十三五重大科技专项水专项中“城镇供水系统关键材料设备评估验证及标准化”之“大型臭氧发生器集成装备研发评估验证及标准化”课题。

历经二十余年的发展，国林科技现已成为全球知名的臭氧系统装备专业化生产企业，全球臭氧系统供应商。

GUOLIN®

Brief Introduction

Qingdao Guolin Environmental Technology Co., Ltd. was established in 1994, which is high-tech enterprise with integrating science, industry and trade. As a professional company, Guolin is engaged in ozone generation mechanism research, ozone equipment design and manufacture, ozone application engineering design, installation, commissioning, operation and maintenance. Guolin is also the representative enterprise in domestic ozone industry. On July 23, 2019, the Company officially landed on the GEM of the Shenzhen Stock Exchange, securities abbreviated as: Guolin Technology, stock code: 300786.

Guolin is the first enterprise which can design and manufacture 10kg/h, 50kg/h, 100kg/h and 120kg/h large-scale ozone generator. The Company's products cover all-series ozone generator and ozone system equipment, and are widely used in the treatment of municipal water supply, municipal sewage treatment, industrial waste water treatment, flue gas denitrafication, chemical oxidation and other fields.

Guolin is the main drafting unit of China Urban Construction Industry Standard— “Ozone Generator for Water Treatment” (CJ/T322-2010) and National Standard— “Technical Requirements for Ozone Generator for Water and Waste Water Treatment” (GB/T 37894-2019). Guolin undertakes in the project task of 12th Five-Year Plan “Special Water Item” — “Non-glass dielectric tube large ozone generator research, development and industrialization”, project task of “Synergistic Absorption Technology of Pre-ozonation of NOx and SO_2” in 13th Five-Year Plan key R&D program—Demonstration project of integrated control technology for coal-fired pollutants(SO_2、NOx、PM) and project task of “Evaluation and Standardization of Integrated Equipment of Large Ozone Generator” in 13th Five-Year Plan Special Water Item—Evaluation and Standardization of Key Material and Equipment in Urban Water Supply System.

With more than 20 years of development, Qingdao Guolin Environmental Technology Co., Ltd. has become the globally known professional ozone equipment manufacturer and global ozone system supplier.

企业文化
Guolin Culture

公司使命 MISSION

发展臭氧科技、铸造绿色工业，致力于改善人类生存环境的崇高事业

Mission: Developing ozone technology and creating green industry. We will continually contribute to improving living environment of human beings.

公司愿景 VISION

成为全球臭氧系统供应商，为用户提供稳定、先进、创造价值的产品

Vision: We are committed to becoming global ozone system supplier and providing stable, advanced and valuable product for our valued customer.

公司价值观 VALUE

做创造价值的人，做受人尊重的企业

Value: Be a man of creating values and be an enterprise to be respected.

经营理念 PHILOSOPHY

科技创新 产业报国

Philosophy: Scientific and technological innovation, industries serve the country.

GUOLIN®

荣誉资质
Honor

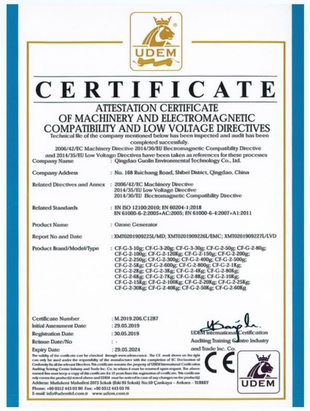

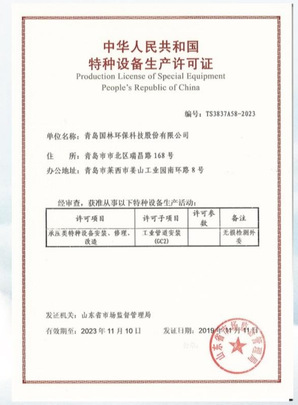

国林大事记
History

1994年12月13日
青岛国林实业有限责任公司成立。

2001年
公司自主研制的“可连接式臭氧发生器搪瓷涂层高压电极”（ZL01268920.3）“大型臭氧发生器放电室”（ZL01269045.7）获得国家专利。

2002年9月
公司成功研制3kg/h大型中频臭氧发生器，改变中国30多年来只能生产2kg级以下臭氧发生器的局面。

2004年11月
公司自主成功研发单机产量“20kg/h大型臭氧发生器”，并通过了建设部科技成果鉴定。

2008年7月
公司20kg/h大型臭氧系统中标昆山自来水厂20万吨/天自来水处理项目，在市政给水领域与国外臭氧设备同台竞舞。

2008年10月
公司自主研发成功了“氧气源50kg/h大型氧发生器”，成为全球第三家能够制造50kg/h级以上臭氧发生器的企业。

2009年12月
国林臭氧装备产业基地（一期）举行奠基仪式并开工建设。

2010年6月
由公司主编的国家行业标准《水处理用臭氧发生器》CJ/T322-2010正式实施。

2011年
公司承担国家十二五科技重大专项——水专项中“大型臭氧发生器设备研制及其产业化”课题项目。

2011年10月
占地33000平方米的国林臭氧装备产业基地（一期）正式投产。

2012年3月
占地55000平方米的国林臭氧装备产业基地（二期）正式开工。

2012年6月
自主研发“大型（120kg/h）臭氧发生器”项目通过住建部科技成果评估。

2013年10月
公司“大型（100kg/h）非玻璃介质臭氧发生器”项目通过住建部科技成果评估。

2014年7月
公司承担的国家“十二五”科技重大专项——水专项“非玻璃介质大型臭氧发生器设备研制及其产业化”课题，顺利通过了国家住建部水专项管理办公室验收，成为十二五水专项产业化课题首批通过验收的课题。

2014年11月
占地55000平方米的国林臭氧装备产业基地二期项目完工投产，国林拥有总占地88800平方米、建筑面积52000平方米的产业基地。

2015年7月
公司上市新三板，股票简称：国林环保，股票代码：832938。

2017年
公司参与十三五科技重大专项——水专项城镇供水系统关键材料设备评估验证及标准化课题任务。

2017年
公司主持制定《水处理用臭氧发生器技术要求》国家标准。

2018年5月
公司入选《国家鼓励发展的重大环保技术装备目录（2017年版）》依托单位。

2019年7月
公司首次公开发行股票，并在深圳证券交易所上市。股票简称：国林科技，股票代码：300786。

2019年8月
公司主持制定的《水处理用臭氧发生器技术要求》GB/T 37894-2019国家标准发布，2020年7月1日正式实施。

生产能力
Production Capacity

公司专注于臭氧系统设备制造领域，致力于成为专业化臭氧系统供应商，拥有占地130余亩，建筑面积5万余平方米的专业化生产基地，拥有制造整套臭氧系统设备的生产车间及技术性能测试车间，臭氧系统关键核心器件均已实现独立生产。

公司通过制造业信息化的建设，推动公司生产业务流程的改革，以信息化、装备化来提升生产效率，实现智能化办公及智能化生产，致力打造科技一流、运行高效的新型现代化生产基地。

Guolin focuses on the field of ozone system equipment manufacturing and is committed to becoming a specialized ozone system supplier. The company has a specialized production base covering an area of more than 86,666.67m² and a building area of more than 50,000.00 m². It has a production workshop and technical performance test workshop for manufacturing a complete set of ozone system equipment. The key core components of the ozone system have been independently produced.

Through the construction of manufacturing informatization, the company promotes the reform of production process, improves production efficiency by informatization and equipping, realizes intelligent office and intelligent production, and creates a new modern production base with first-class technology and efficient operation.

臭氧总装车间
General Assembly Department

臭氧总装车间建筑面积近14300平方米，设置非玻璃介质生产线、发生室无尘装配、电源柜组装、臭氧发生器性能测试平台，是集大、中、小型臭氧发生器组装及臭氧系统配套产品生产的综合性车间。总装车间秉承精益求精的“工匠精神”，专业、精细化制造管理，为用户提供高端产品。

Ozone equipment general assembly workshop covers a building area of nearly 14,300.00 m². It is equipped with non-glass medium production line, dust-free assembly of ozone generation tank, power cabinet assembly and ozone generator performance test platform, which is a comprehensive workshop integrating large, medium and small ozone generator assembly and corollary equipment production. The general assembly workshop adheres to the "craftsman spirit" of continuous improvement, specialized and refined manufacturing management, and provides users with high-end products.

核心技术体系
Core Technology

臭氧应用技术 / Ozone application technology

- 饮用水臭氧应用技术 Application technology of ozone in drinking water treatment
- 市政污水臭氧应用技术 Application technology of ozone in municipal waste water treatment
- 工业废水臭氧应用技术 Application technology of ozone in industrial waste water treatment
- 烟气脱硝臭氧应用技术 Application technology of ozone in flue gas denitrification

↑

臭氧系统设备集成、在线检测与远程诊断控制核心技术
Core technology of integration, on-line detection and remote control of ozone system

↑ ↑

臭氧发生器系列产品研制技术
Ozone generator series products development technology

- 臭氧发生室技术 Ozone generation tank technology
- 臭氧专用中高频电源技术 Special high and middle frequency power technology
- 臭氧发生器控制技术 Ozone generator control technology

臭氧系统配套产品研制技术
Ozone system accessory products development technology

- 气源处理系统技术 Feed gas treatment system technology
- 臭氧投加系统技术 Ozone dosing system technology
- 尾气处理系统技术 Tail ozone gas treatment system

↑

臭氧发生器核心技术 / Core technology of ozone generator

- 臭氧放电体介质阻挡放电技术 Dielectric obstruction discharge technology
- 臭氧专用电源控制技术及关键器件技术 Special power control and key parts technology
- 臭氧专用中高频变压器关键器件技术 Special high and middle frequency transformer key parts
- 臭氧发生室安全运行保护关键器件技术 Key parts for generation tank safe operation protection

臭氧发生器核心技术
Core Technology

- 基于容性负载的大功率逆变谐振电源技术
  Capacitive load high power inverter resonant power supply technology
- 容性负载大功率干式高压变压器技术
  Capacitive load high power dry type high voltage transformer technology
- 基于IP核和数字逻辑电路的电源控制技术
  Power control technology based on IP core and digital logic circuit
- 玻璃和非玻璃放电介质技术
  Glass and non-glass discharge dielectric technology
- 嵌入式臭氧系统在线检测和远程监控技术
  Embedded on-line detection and remote monitoring technology of ozone system

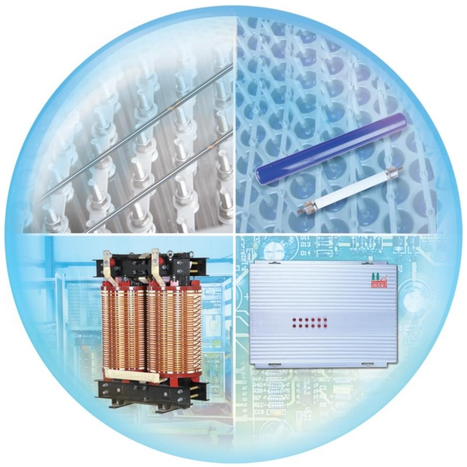

GUOLIN®

臭氧应用领域介绍
Ozone Technology Application Area

空间消毒
Space Disinfection

应用特点
Application Features

高效彻底 Highly Effective

应用臭氧消毒时，在相对密闭的环境下，扩散均匀，包容性好，克服了紫外线及各类杀菌方式存在诸多死角的固有特点，可达到全方位、快速、高效的消毒灭菌目的。

Ozone should be used in a relatively closed environment for disinfection. Ozone can spread evenly and has good inclusion, thus it avoid the problem of dead angles existed in the method of ultraviolet sterilization and other sterilization methods. Ozone disinfection can achieve the purpose of all-round, rapid and efficient disinfection.

操作方便 Simple Operation

根据消毒灭菌的要求和空间体积，确定臭氧发生量，灭菌时刻直接将臭氧气体通入房间中或空调系统中等，消毒杀菌时间可根据需要自行设定。

Required ozone capacity should be confirmed according to the requirements of disinfection and sterilization space. Ozone gas can dose into the room directly or air conditioning system for disinfection. Disinfection time can be set according to requirements.

高洁净性 Good Cleanliness

应用臭氧做消毒灭菌剂，停机30分钟后，剩余臭氧可渐渐自行分解还原为氧气，无残留、无污染，绿色环保。

Good cleanliness: when the ozone is used as a disinfectant, it can be automatically decomposed into oxygen after ozone generator stops for 30 minutes without residue and pollution.

对环境物品的影响 Effect to environmental goods

对环境物品的影响：臭氧对空气中的浮游菌灭杀所需臭氧的浓度很低，一般只需要2-4PPm，对物体表面沉降菌落一般需要10-15PPm左右，空气中臭氧浓度只有10-15百万分之一，是化学熏蒸浓度的500分之一，由于灭菌高效，快速，因此正确使用不足以构成对物体的腐蚀的条件。

Ozone concentration is only required to be 2-4ppm when ozone is used for killing of planktonic bacteria in the air. Ozone concentration is only required to be 10-15ppm when ozone is used for killing of settlement colony on the surface of product. Ozone concentration in the air is only 10-15 ppm, which is 1/500 of chemical fumigation concentration. Due to high efficiency and fast speed, so the correct operation of ozone gas won’t cause any corrosion to the objects.

应用领域 Application Area

- 用于制药、医用器具、冷库、食品车间、病房、工作服装、器材杀菌消毒，
- 对仓贮场所、蛋禽加工、果蔬种植加工的防毒、防霉、保鲜，
- 养殖、屠宰、鱼类加工、脂肪酸类工厂、橡胶厂、垃圾废物处理、污水处理厂除臭净化 。

- It is used for disinfection of pharmaceutical industry, medical equipment, cold storage, food shop, wards, work clothes and apparatus.
- It is used for anti-virus, anti-mildew, preservation of storage sites, egg and poultry processing, fruit and vegetable cultivation.
- It is used for deodorization and purification of factories of breeding, slaughtering, fish processing and fatty acids processing, rubber plant, waste disposal, sewage treatment plant.

GUOLIN®

GMP车间或食品净化级别要求
GMP Workshop or Food Purification Class Requirements

三十万级 Class 300,000.00	十万级 Class 100,000.00	万 级 Class 10,000.00	百 级 Class 100.00
2.5PPm	5.0PPm	15PPm	20PPm

臭氧不同环境运用时空气消毒参考浓度表
Air Disinfection Concentration for Different Applications

用 途 Application	种 类 Disinfection object	浓 度 ppm Ozone Concentration	种 类 Disinfection object	浓 度 ppm Ozone Concentration
消 毒 Disinfection	医用器具 Medical appliance	20	病房、手术室 Sickroom, operation room	10-20
	冷库（30万级） Cold storage(30ppm)	6-10	工作服消毒 Work clothes disinfection	10-20
	食品车间 Food factory	5-10		
防 霉 保 鲜 Anti-mildew Fresh-keeping	一般场所 Public place	1-2	叶绿素少的蔬菜 Vegetables of less chlorophyll	1.5-1
	鸡蛋 Eggs	2-2.5	鱼、干酪 Fish, cheese	0.5-1
	苹果、香蕉 Apple, banana	2.5-3.5		
除 臭 Deodorization 净 化 Purification	鱼类加工厂 Fish processing factories	3	橡胶厂 Rubber plant	3-10
	屠宰车间 Slaughter workshop	2-3	垃圾废物处理 Waste disposal	10
	脂肪酸类工厂 Fatty acid plant	10		

臭氧投加方式
Ozone Dosing Mode

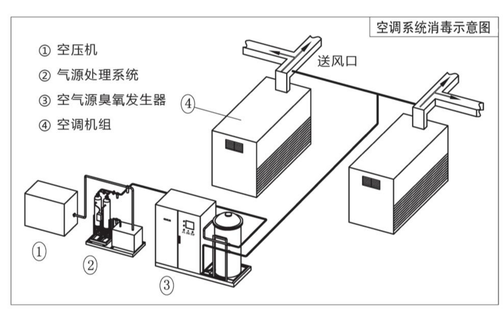

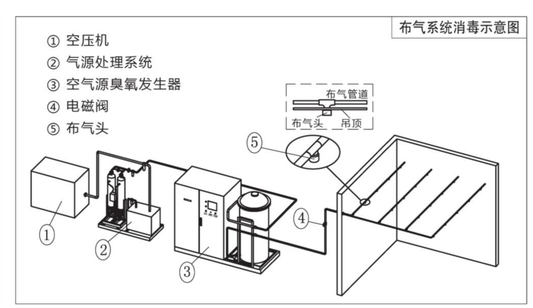

产品介绍
Product Introduction

该系列臭氧发生器核心器件采用专利技术——可连接式DTA非玻璃放电体，臭氧产量大，臭氧浓度高，臭氧电源采用自主专用技术电源，并可集成气源系统一体化设计，适应性更强，设备的稳定性、技术指标及应用效果均优于国内同类产品，使用寿命更是国内其他产品的几倍。

设备可实现24小时不间断开机，由于其优良的稳定、持久特性，因此可实现一机多用模式，更适合消毒空间数量多、跨度大、区域分散的消毒应用，整体固定投资小，设备管理与操作便捷。

The core device of this series of ozone generators uses the patented technology—connectable type non-glass dielectric tube . The patented enamel dielectric tube has advantages of large ozone production and high ozone concentration. Ozone power supply adopts special independent power supply technology for more reasonable matching and better adaptability. The stability, technical indicators and application results of the equipment are better than those of domestic similar products, and it's life time is also much longer than other domestic products.

This type of equipment can operate for 24 hours. Due to its excellent stability and durability, multipurpose mode can be achieved. So the equipment is more suitable for the disinfection application of large space, large span and decentralized area. The equipment can be overall fixed with less investment. Both the management and operation are convenient.

产品特点
Product Characteristics

- 外电极管采用316L不锈钢材质，专利放电管采用进口介质涂层原料，强度高、耐热性、耐压性优良
- 采用水冷却方式，相比风冷设备性能更稳定，开机时间更长
- 一体机内置气泵及冷却水、气源处理装置，相比风冷型配置更完善
- 臭氧产量可实现平滑调节，臭氧浓度高，设备性能稳定，维护方便
- 设备具有过流、过压、过温等一系列运行监测与保护功能
- 臭氧产量可调节，臭氧浓度高，产量大，工作寿命长
- 设备控制分手动及自动两种类型，可根据使用要求选择

- External electrode tube is made of 316L stainless steel; imported medium coating material is used for dielectric tube
- Water cooling mode makes performance of ozone generator is more stable than air cooled equipment performance and operation time is longer
- The configuration of equipment with built-in pump, cooling water device and feed gas treatment device is more perfect
- Equipment has operation monitoring functions to current, voltage and temperature and protection functions
- Adjustable ozone capacity; large ozone capacity, high ozone concentration and long service life time
- Control method includes manual control and automatic control for option

产品组成
Product Composition

- 臭氧发生装置（臭氧发生腔、放电管、高压熔断器）
- 电源装置（含高压变压器、直流电抗器、进线电抗器、整流逆变等）
- 控制装置（含线路板、臭氧产量调节旋钮、微电脑开关或定时器等）
- 一体机含气源装置（高压风机、冷凝器、过滤器等）
- 一体机含冷却单元（内置冷却水箱、循环装置）

- Ozone generation device (ozone generation tank, dielectric tube, high voltage fuse)
- PSU device(includes high voltage transformer, DC reactor, coil in reactor, rectifier and inverter, etc)
- Control device (includes circuit board, ozone capacity adjusting knob, microcomputer switch or timer, etc.)
- Feed gas treatment device (includes high pressure blower, condenser, filter, etc.)
- Cooling unit (includes cooling water tank, circulating device)

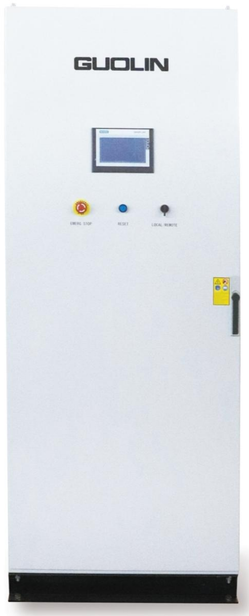

空间消毒标准机系列产品参数表
Standard Ozone Disinfector Specifications

型 号 Model	臭氧产量 Ozone capacity	气量 Feed gas flow	冷却水流量 Cooling water flow rate	电源 Power supply	额定功率 Rated power rate	进出气口尺寸 Gas outlet size	进出水口尺寸 Cooling water inlet size	外形尺寸 Dimension
	g/h	Nm^3/h	m^3/h	V/Hz	Kw			mm
CF-G-3-15g	15	1.00	0.05	220/50	0.3	G1/4"	G1/4"	600×500×1500
CF-G-3-30g	30	2.00	0.1		0.6			
CF-G-3-40g	40	2.70	0.12		0.66			
CF-G-2-60g	60	4.00	0.18		1.00	G1/2"	G1/2"	600×800×1700
CF-G-2-120g	120	8.00	0.36		2.00			1160×700×1700
CF-G-2-180g	180	16.00	0.60		2.40		G3/4"	
CF-G-2-250g	250	18.00	0.75	380/50	3.50			
CF-G-2-300g	300	22.00	0.90		4.50			
CF-G-2-400g	400	25.00	1.20		6.60			
CF-G-2-600g	600	35.00	1.80		10.00			1260×800×1700
CF-G-2-800g	800	45.00	2.40		12.00	G3/4"	DN25法兰	1400×800×1700
CF-G-2-1000g	1000	55.00	3.00		16.00			1900×900×1700
CF-G-2-1200g	1200	65.00	3.60		20.00	G1"	DN32法兰	2100×900×1700

说明：设备外形尺寸因产品升级会略有变化，具体以实物为准。此列表以外的其他产量机型可制做，使用有特殊要求可接受订制。
Instruction: The dimension in the technical parameter table is only for reference.Please make the material object as the standard.
Other production models other than these in above list can be made and also can be customized with special requirements.

空间消毒一体机系列产品参数表
All-in-one Ozone Disinfector Specifications

型 号 Model	臭氧产量 Ozone capacity	气量 Feed gas flow	冷却水流量 Cooling water flow rate	电源 Power supply	额定功率 Rated power rate	进出气口尺寸 Gas outlet size	外形尺寸 Dimension	配套设备 Corollary equipment
	g/h	Nm^3/h	m^3/h	V/Hz	Kw		mm	
PL-ST-GL-001A	5	内置气泵	风冷型	220/50	0.18	ϕ65扩散孔	350×440×230	内置气源及气源处理设备 Built-in air source treatment device
PL-ST-GL-001C	10		内置水箱		0.35	ϕ25UPVC管	480×400×880	
PL-ST-GL-002	15				0.45	G3/4"内螺纹	800×280×580	
PL-ST-GL-001G	30				0.75	ϕ25UPVC管	450×720×880	
CF-G-2-50g	50				1.35	ϕ32UPVC管	1000×800×1700	
CF-G-2-80g	80				1.80	ϕ40UPVC管		
CF-G-2-140g	140			380/50	3.20	ϕ50UPVC管	1200×800×1700	
CF-G-2-200g	200				4.40	ϕ63UPVC管		

说明：设备外形尺寸因产品升级会略有变化，具体以实物为准。此列表以外的其他产量机型可制做，使用有特殊要求可接受订制。
Instruction: The dimension in the technical parameter table is only for reference.Please make the material object as the standard. Other production models other than these in above list can be made and also can be customized with special requirements.

案例 Typical Projects

序号	客 户 名 称	臭氧规格	序号	客 户 名 称	臭氧规格
1	扬子江药业集团	100-1000g/h	31	广西昌宏药业有限公司	350g/h
2	山东新时代药业有限公司	10-500g/h	32	山西琳泽制药有限公司	10g/h
3	兰州佛慈制药股份有限公司	20-300g/h	33	康希诺生物股份公司	120g/h
4	王守义十三香调味品集团	100-2000g/h	34	金樵（厦门）生物科技有限公司	80g/h
5	齐鲁药业有限公司	50-150g/h	35	安徽天洋药业有限公司	100g/h
6	悦康药业集团有限公司	200-550g/h	36	黑龙江省地纳制药有限公司	400g/h
7	兰州生物制品研究所有限责任公司	80-200 g/h	37	中国医药集团联合工程有限公司	2000g/h
8	颈复康药业集团有限公司	50-600 g/h	38	杭州娃哈哈医药保健品有限公司	100g/h
9	东北制药集团股份有限公司	100-200g/h	39	四川丙华生物科技有限公司	200g/h
10	华东医药（杭州）百令生物有限公司	30-150g/h	40	济川药业集团有限公司	20-80g
11	青岛亚是加食品有限公司	10-100g/h	41	山东罗欣制药集团股份有限公司	200-300g/h
12	广东一方制药有限公司	400-2000g/h	42	上海细胞治疗集团有限公司	500g/h
13	白帆生物科技（上海）有限公司	120-550g/h	43	浙江康莱特药业有限公司	200g/h
14	华润三九（郴州）制药有限公司	50-200g/h	44	烟台华正医疗器械科技有限公司	500g/h
15	九芝堂股份有限公司	120-650g/h	45	河南羚锐生物药业有限公司	300g/h
16	江苏赛孚士生物技术有限公司	100-400g/h	46	江西青峰药业有限公司	40g/h
17	中科拜克（天津）生物药业有限公司	40-500g/h	47	威海迪素制药有限公司	200g/h
18	铂生卓越生物科技（北京）有限公司	30g/h	48	东营新发药业有限公司	3000g/h
19	石药集团欧意药业有限公司	50-120g/h	49	武汉九珑人福药业有限责任公司	300-500g/h
20	佛山德芮可制药有限公司	100-180g/h	50	厦门中药厂有限公司	800g/h
21	江中食疗科技有限公司	60-400g/h	51	湖北武功记食品有限公司	1200g/h
22	浙江九洲药业股份有限公司	10-50g/h	52	武汉冷记有限公司	100-200g/h
23	浙江朗华制药有限公司	30-3000g/h	53	新疆紫罗兰食品有限公司	100-200g/h
24	康诺亚生物医药科技(成都)有限公司	120-200g/h	54	杭州娃哈哈医药保健品有限公司	50-120g/h
25	四川赛卓药业股份有限公司	30-300g/h	55	北京森科医药有限公司	40g/h
26	江西天新药业有限公司	260-600g/h	56	藤桥食品有限公司	1000g/h
27	北京第一生物化学药业有限公司	200-250g/h	57	电白意顺食品有限公司	800-1500g/h
28	开封大宋制药有限公司	200-300g/h	58	重庆桥头食品有限公司	1000-1500g/h
29	山东安华生物医药股份有限公司	270-350g/h	59	重庆辣媳妇德宝食品有限公司	1000g/h
30	宁夏启元药业有限公司	2000g/h		……	

净水消毒
Drinking Water Disinfection

臭氧处理水的杀菌工艺方式说明
Instruction of sterilization process for ozone water treatment

一种工艺采用正压曝气的混合方式,即采用带有一定压力的臭氧气体，通过微孔曝气装置将臭氧气体投加到水中，臭氧气体通过微孔曝气装置产生大量气泡，气泡在上升的过程中与处理的水充分接触混合。

The first process adopts the mixing mode with a positive pressure aeration process, which doses ozone gas with certain pressure into water by microporous aeration device, ozone gas produced a lot of bubbles through the microporous aeration device, bubble will be fully mixed with water during the rising process.

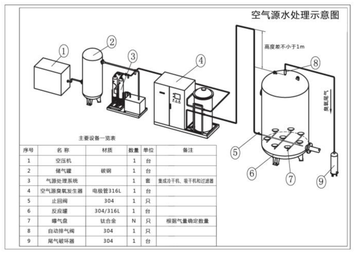

序号	名 称	材质	数量	单位	备注
1	空压机		1	台	
2	储气罐	碳钢	1	台	
3	气源处理系统		1	套	集成油干机、粗干机和过滤器
4	空气源臭氧发生器	电极管316L	1	台	
5	止回阀	304	1	只	
6	反应罐	304/316L	1	台	
7	曝气盘	钛合金	N	只	根据气量确定数量
8	自动排气阀	304	1	只	
9	尾气破坏器	304	1	台	

第二种工艺采用负压投加的混合方式，即采用文丘里管或气液混合泵的方式，将臭氧气体与处理的水充分接触混合。

The second process adopts the mixing method of negative pressure for ozone dosing, that is the method of venturi tube or gas-liquid mixing pump. Ozone gas will be fully mixed with the treated water.

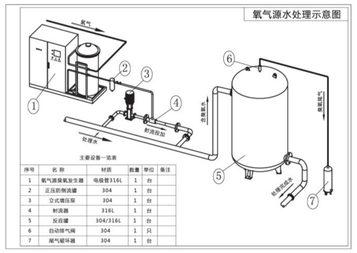

序号	名 称	材质	数量	单位	备注
1	氧气源臭氧发生器	电极管316L	1	台	
2	正压防爆流量	304	1	台	
3	立式增压泵	304	1	台	
4	射流器	316L	1	台	
5	反应罐	304/316L	1	台	
6	自动排气阀	304	1	只	
7	尾气破坏器	304	1	台	

产品介绍
Product Introduction

该系列臭氧发生器核心器件采用专利技术——可连接式DTA非玻璃放电体，臭氧产量大，臭氧浓度高，臭氧电源采用自主专用技术电源，整体匹配合理，适应性更强，该类型设备采用标准气源及冷却保障，设备的稳定性、技术指标及应用效果更优，设备使用寿命长可达10年以上。

富氧一体机由臭氧发生单元、变压吸附制氧装置组成，并采用集成化一体式设计，该系列臭氧发生器安装、操作简便。

The core device of this series of ozone generators uses the patented technology—connectable type DTA non-glass dielectric tube . The patented enamel dielectric tube has advantages of large ozone production and high ozone concentration. Ozone power supply adopts special independent power supply technology for more reasonable matching and better adaptability. The equipment uses standard feed gas source and cooling way guarantee. The stability, technical indicators and application results of the equipment are better than those of domestic similar products. The life time of equipment is more than ten years.

This series of ozone generators uses a unique patented technology . Ozone generator is composed of ozone generation unit and PSA oxygen generation device. With integrated design, this series of ozone generators installation and operation will be much easier.

产品特点
Product Characteristics

- 外电极管采用316L不锈钢材质，放电管采用进口介质涂层原料
- 采用水冷却方式，多级冷却结构设计确保冷却效率提高20%，可连续开机使用
- 专利搪瓷放电体臭氧浓度高，自身强度高，耐热性、耐压性能优良，维护方便
- 臭氧产量可实现平滑调节，臭氧浓度高，产量大，设备性能更稳定，寿命更久
- 设备具有电流、电压、温度、流量、气体压力、运行状态等一系列运行监测与保护功能
- 设备控制分手动及自动两种类型，可根据使用要求选择
- 富氧一体机内置制氧机，采用变压吸附制氧技术，氧气浓度高、气源质量好

- External electrode tube is made of 316L stainless steel; imported medium coating material is used for dielectric tube
- Water cooling mode. Multi-stage cooling structure design ensures the cooling efficiency to be increased by 20%. Equipment can be running continuously for 24hrs
- Patented enamel dielectric tube with features of high strength, good pressure resistance and good heat resistance; easier to be maintained
- Ozone capacity could be regulated with range of 10%-100%; high ozone concentration, large ozone capacity, more stable performance and longer life time
- Equipment has operation monitoring functions to current, voltage, temperature, flow rate, gas pressure and operation status and protection functions
- Control method includes manual control and automatic control for option
- Built-in oxygen generator with PSA oxygen generation technology; high oxygen concentration and good quality oxygen gas

产品组成
Product Composition

- 控制装置（含线路板、功率表、臭氧产量调节旋钮等）
- 臭氧发生装置（臭氧发生腔、放电管、高压熔断器）
- 电源装置（含高压变压器、直流电抗器、进线电抗器、整流逆变等）
- 仪表管路装置（气体流量计、减压阀、止回阀、压力开关、调节阀等）
- PLC及检测仪表（自控型配）
- 富氧一体机气源装置（含制氧机与过滤器）

- Control device (includes circuit board, power meter, ozone capacity adjusting knob, etc.)
- Ozone generation device (ozone generation tank, dielectric tube, high voltage fuse)
- PSU device(includes high voltage transformer, DC reactor, coil in reactor, rectifier and inverter, etc)
- Instruments and pipelines(gas flow meter, pressure relief valve, check valve, pressure switch and regulation valve, etc.)
- PLC control system and monitoring instruments (automatic control type)
- Feed gas device (includes oxygen generator,filter.)

净水消毒标准机系列产品参数表 Water Disinfection Ozone Generator Specifications

■ 空气源 Air source

型 号 Model	臭氧产量 Ozone capacity	气量 Feed gas flow	臭氧浓度 Ozone concen-tration	冷却水流量 Cooling water flow rate	电源 Power supply	额定功率 Rated power rate	进出气口尺寸 Gas outlet size	冷却水口尺寸 Cooling water size	外形尺寸 Dimension	配套设备 Corollary equipment
	g/h	Nm^3/h	mg/L	m^3/h	V/Hz	Kw			mm	
CF-G-3-10g	10	0.50	25-35	0.04	220/50	0.35	G1/4"	G1/4"	600×500×1500	集成冷凝器、吸附干燥机，仅需外配空压机 Build-in condenser & adsorption air dryer. Only air compressor is required.
CF-G-3-20g	20	1.00		0.08		0.50				
CF-G-3-30g	30	1.50		0.12		0.60				
CF-G-2-50g	50	2.50		0.20		1.00	G1/2"	G1/2"	600×800×1700	集成吸附干燥机，需外配空压机+冷干机 Build-in adsorption air dryer. Air compressor and refrigerated air dryer are separate.
CF-G-2-80g	80	4.00		0.32		1.60				
CF-G-2-100g	100	4.00		0.40		2.00		G3/4"	1160×700×1700	需外配空压机+冷干机+吸附干燥机组成气源系统。 Air compressor, refrigerated air dryer & adsorption air dryer are separately configured.
CF-G-2-150g	150	6.00		0.60	380/50	3.00				
CF-G-2-200g	200	8.00		0.80		4.00				
CF-G-2-300g	300	12.00		1.20		6.00				
CF-G-2-500g	500	20.00		2.00		10.00			1260×800×1700	
CF-G-2-600g	600	24.00		2.40		12.00		DN25法兰	1400×800×1700	
CF-G-2-800g	800	32.00		3.20		16.00	G3/4"		1900×900×1700	
CF-G-2-1000g	1000	40.00		4.00		18.00		DN32法兰	2100×900×1700	

■ 氧气源 Oxygen source

型 号 Model	臭氧产量 Ozone capacity	气量 Feed gas flow	臭氧浓度 Ozone concen-tration	冷却水流量 Cooling water flow rate	电源 Power supply	额定功率 Rated power rate	进出气口尺寸 Gas outlet size	冷却水口尺寸 Cooling water size	外形尺寸 Dimension	配套设备 Corollary equipment
	g/h	Nm^3/h	mg/L	m^3/h	V/Hz	Kw			mm	
CF-G-3-5g	5	0.10	50-60	0.01	220/50	0.10	G1/8"	G1/8"	190×440×400	直接使用瓶装或罐装氧气；或配套制氧系统。 Use oxygen cylinder or oxygen tank directly; or oxygen generator system
CF-G-3-10g	10	0.13	80-120	0.02		0.20	G1/4"	G1/4"	380×840×460	
CF-G-3-30g	30	0.38		0.06		0.40				
CF-G-3-50g	50	0.63		0.10		0.60				
CF-G-2-100g	100	1.25		0.20		1.00	G1/2"	G1/2"	600×700×1700	
CF-G-2-150g	150	1.88		0.30		1.50		G1/2"	600×800×1700	
CF-G-2-200g	200	2.50		0.40		2.00		G3/4"	1160×700×1700	
CF-G-2-300g	300	3.75		0.60		3.00				
CF-G-2-500g	500	6.25		1.00		4.50				
CF-G-2-600g	600	7.50		1.20	380/50	5.40			1260×800×1700	
CF-G-2-800g	800	10.00		1.60		7.20		DN25法兰	1400×800×1700	
CF-G-2-1000g	1000	12.50		2.00		8.00				

备注：5g臭氧发生器为微型试验机。Note: 5g/h ozone generator is the miniature testing machine.

富氧一体机系列产品参数表 Specifications of Ozone Generator with integrated Oxygen System

型 号 Model	臭氧产量 Ozone capacity	气量 Feed gas flow	臭氧浓度 Ozone concen-tration	冷却水流量 Cooling water flow rate	电源 Power supply	额定功率 Rated power rate	进出气口尺寸 Gas outlet size	冷却水口尺寸 Cooling water size	外形尺寸 Dimension	气源处理系统 Corollary equipment
	g/h	Nm^3/h	mg/L	m^3/h	V/Hz	Kw			mm	
CF-G-3-10g	10	0.10	80-120	0.02	220/50	0.75	G1/4"	G1/4"	600×500×1500	集成气源及制氧机 Integrated air source and oxygen enerator
CF-G-3-20g	20	0.18		0.04		0.85				
CF-G-3-30g	30	0.30		0.06		1.00				
CF-G-3-50g	50	0.45		0.10		1.20				
CF-G-3-60g	60	0.60		0.12		1.40				
CF-G-2-80g	80	0.80		0.16		2.10	G1/2"	G1/2"	600×800×1700	
CF-G-2-100g	100	1.00		0.20		2.40				

说明：设备外形尺寸因产品升级会略有变化，具体以实物为准。此列表以外的其他产量机型可制做，使用有特殊要求可接受订制。
Instruction: The dimension in the technical parameter table is only for reference.Please make the material object as the standard.
Other production models other than these in above list can be made and also can be customized with special requirements.

GUOLIN®

案例 Typical Projects

序号	客 户 名 称	臭氧规格	序号	客 户 名 称	臭氧规格
1	农夫山泉	80-300g/h	16	北京汇源果汁食品饮料有限公司	60g/h
2	娃哈哈集团	100-600g/h	17	湖南湘娃饮料科技有限公司	80-150g/h
3	华润食品饮料有限公司	100-300g/h	18	哈尔滨佳怡饮料有限公司	300g/h
4	鹿寨县九龙泉纯净水厂	100g/h	19	东莞市东娃饮用水有限公司	200g/h
5	天津冠芳可乐饮料有限公司	100-150g/h	20	山东一山一水饮品有限公司	100g/h
6	广西中源山泉有限公司	100-200g/h	21	生力啤酒广州公司	200g/h
7	涿州市葛娃娃多元素水厂	80g/h	22	雪花啤酒有限公司	300g/h
8	厦门银鹭食品有限公司	60-150g/h	23	青岛华东葡萄酒有限公司	60g/h
9	屈臣氏蒸馏水北京公司	60-150g/h	24	北京牛栏山酒业水厂	40g/h
10	哈尔滨喜旺饮品有限公司	80-150g/h	25	厦门冠州食品有限公司	200g/h
11	日照莲泓水业有限公司	100g/h	26	海宁市新世纪饮用水有限公司	50g/h
12	康师傅纯净水	50g/h	27	徐州项王水业有限公司	150g/h
13	青岛啤酒二厂	100g/h	28	齐齐哈尔冷韵泉苏打水制造有限公司	40g/h
14	靖宇修元矿泉饮品有限公司	150g/h	29	哈尔滨喜旺饮品有限公司	80g/h
15	莱阳天府集团（莱阳梨汁）	120g/h		……	

泳池水消毒
Swimming Pool Disinfection

臭氧溶于水后，有很强的氧化能力，能迅速杀灭水中的细菌、真菌、大肠杆菌、病毒等微治病微生物，并能彻底氧化有机物，通过对游泳池水进行臭氧氧化，达到消毒、杀菌、除味、防止传染病传播的目的，同时臭氧可氧化水中的铁、锰等金属离子，分解水中散射光线的微小有机体，从而大大提供提高水的清澈度，使水呈现出美丽的蓝色。利用臭氧对游泳池水进行处理是目前国际上普遍采用的方式，泳池水只有使用臭氧处理才能确保水质达到国际游泳联合会（FINA）的标准，是其他消毒方法无法替代的。

After ozone is dissolved in water, ozone water can quickly kill the water of bacteria, fungus, escherichia coli, viruses and other micro cure microorganisms and it also can oxidize organic matter completely with high oxidative capacity. It can achieve disinfection, sterilization, deodorization and prevention of infectious diseases spread by ozone oxidation to swimming pool water, at the same time, ozone can oxidize iron, manganese and other metal ions in water and decompose micro organism of scattered ray in the water to improve water clarity and make water to show a beautiful blue color. The use of ozone treatment for swimming pool water is currently widely used in the world. Ozone treatment could ensure the water quality to reach the International Swimming Federation (FINA) standard and can not be replaced by other disinfection methods.

消毒工艺
Disinfection Process

根据泳池消毒技术规程，泳池消毒工艺分全程式和半程式两种工艺，按实际消毒设计要求不同而选择不同，一般通过负压的方式将臭氧导入水中，并通过专用混合器进行充分混合，最后通过反应罐及配套设施达到消毒杀菌的要求(即CT≥1.6)。

According to the technical rules for swimming pool disinfection, pool disinfection process is divided into full process mode and half process mode, both of them can be chosen according to the actual design requirements of disinfection. Generally speaking, ozone will be dosed into water by negative pressure way and then mixed with water by special mixer to reach the disinfection requirements by final reaction tank and ancillary facilities. (i.e., CT ≥ 1.6).

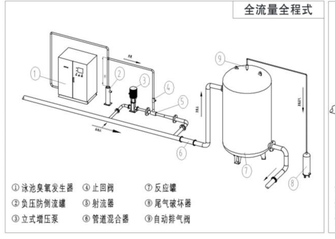

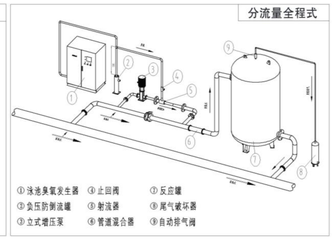

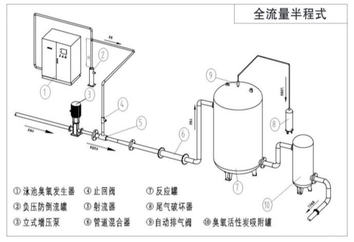

产品介绍
Product Introduction

该系列臭氧发生器采用独有的专利技术，采用集成化一体式设计，该系列臭氧发生器安装、操作简便。

该系列臭氧发生器核心器件采用专利技术——可连接式DTA非玻璃放电体，臭氧产量大，臭氧浓度高，臭氧电源采用自主专用技术电源，整体匹配合理，适应性更强。

该类型设备采用专用气源处理技术，相比其他气源处理方式更可靠，设备更适合泳池特有的潮湿环境，其设备运行稳定性高，设备使用寿命长。

This series of ozone generator uses the unique patent technology and adopts the integrated design, easy to install and operate.

The core device of this series of ozone generator adopts patent technology —connectable DTA non-glass discharge body, with high ozone capacity and high concentration. The ozone generator using the independent special technology power supply, the overall match is reasonable, and the adaptability is stronger.

This type of machine adopts special air source treatment technology, which is more reliable than other air source treatment methods. The equipment is more suitable for the unique humid environment of the swimming pool, with high operation stability and long service life.

产品系列和组成
Product Composition

- 臭氧发生装置（臭氧发生腔、放电管、高压熔断器）
- 电源装置（含高压变压器、直流电抗器、进线电抗器、整流逆变等）
- 控制装置（含线路板、功率表、臭氧产量调节旋钮等）
- 气源装置（含高压风机或空压机、专用吸附干燥装置等）
- 仪表管路装置（气体流量计、止回阀、调节阀等）
- PLC控制系统（自动控制型配）

- Ozone generation device (ozone generation tank, dielectric tube, high voltage fuse)
- PSU device(includes high voltage transformer, DC reactor, coil in reactor, rectifier and inverter, etc.)
- Control device (includes circuit board, power meter, ozone capacity adjusting knob, etc.)
- Feed gas device (includes high pressure blower, heat regeneration adsorption device, etc.)
- Instruments and pipelines(gas flow meter, check valve and regulation valve, etc.)
- PLC control system (automatic control type)

泳池用臭氧发生器系列产品参数表 Ozone Generator Specifications

■ 负压泳池型臭氧发生器 Negative Pressure Swimming Pool Ozone Generator

型 号 Model	臭氧产量 Ozone capacity	臭氧浓度 Ozone concentration	冷却水流量 Cooling water flow rate	电源 Power supply	额定功率 Rated power rate	进出气口尺寸 Gas outlet size	进出水口尺寸 Cooling water inlet size	外形尺寸 Dimension	配套设备 Corollary equipment
	g/h	mg/L	m^3/h	V/Hz	Kw			mm	
SCF-25g	25	≧20	0.1	220/50	1.75	G1/2"	G1/2"	600×800×1700	集成空气处理装置，需外配射流水泵和射流器来提供负压吸气动力。Build-in air treatment system, the pump and injector need to be configured separately to provide negative pressure suction power.
SCF-50g	50		0.2		2.75				
SCF-80g	80		0.32		3.35			1000×800×1700	
SCF-100g	100		0.4	380/50	4.25			1200×800×1700	
SCF-150g	150		0.60		5.25			1400×800×1700	
SCF-200g	200		0.80		8.20			1600×800×1700	
SCF-250g	250		1.00		9.25				
SCF-300g	300		1.20		10.25			1800×800×1700	
SCF-350g	350		1.40		13.25	G3/4"	G3/4"		
SCF-400g	400		1.60		14.25			2000×800×1700	

备注：泳池行业认定的、集成空气处理装置的一体式负压放电臭氧发生器。
Note: Swimming Pool Ozone Generator is an integrated negative pressure discharge ozone generator with air treatment system, verified by the Swimming Pool Industry.

■ 泳池一体化臭氧集成机 Swimming Pool Integrated Ozone Generator

型 号 Model	臭氧产量 Ozone capacity	臭氧浓度 Ozone concentration	冷却水流量 Cooling water flow rate	电源 Power supply	额定功率 Rated power rate	进出水口尺寸 Cooling water inlet size	发生器外形尺寸 Dimension	配套设备 Corollary equipment
	g/h	mg/L	m^3/h	V/Hz	Kw		mm	
CF-G-3-10g	10	≧20	0.04	220/50	0.9	G1"	600×1000×1600	成套集成空气气源及臭氧投加设备 Integrated air source system and ozone dosing device
CF-G-3-20g	20		0.08		1.75	G1-1/4"		
CF-G-3-30g	30	80-120	0.06		2.00	G1"	600×1300×1600	成套集成富氧气源及臭氧投加设备 Integrated oxygen source system and ozone dosing device
CF-G-3-40g	40		0.08		2.00			
CF-G-3-50g	50		0.10		2.20			
CF-G-3-60g	60		0.12		2.50	G1-1/4"	600×1400×1600	
CF-G-3-80g	80		0.16		3.00		1400×800×1700	
CF-G-3-100g	100		0.20		3.20			

备注：内部集成制氧机或吸附干燥机、臭氧发生器、防倒流装置、水泵、射流器及尾气破坏器。
Note: Internal integrated oxygen generator or adsorption air dryer, ozone generator, anti-backflow device, water pump, injector and ozone destructor.

说明：设备外形尺寸因产品升级会略有变化，具体以实物为准。此列表以外的其他产量机型可制做，使用有特殊要求可接受订制。
Instruction: The dimension in the technical parameter table is only for reference.Please make the material object as the standard.
Other production models other than these in above list can be made and also can be customized with special requirements.

GUOLIN®

产品特点
Product Characteristics

- 外电极管采用316L不锈钢材质，放电体采用进口介质涂层原料
- 采用专用放电技术，为泳池专用，针对性强、适应性高
- 采用专用气源处理方式，干燥效率高、气源质量好，更适合泳池潮湿、腐蚀的环境
- 专利搪瓷放电体自身强度高，耐热性、耐压性能优良，维护方便
- 臭氧产量可实现平滑调节，臭氧浓度高，产量大，设备性能更稳定，寿命更久
- 设备具有电流、电压、温度、流量、气体压力、运行状态等一系列运行监测与保护功能
- 设备控制分手动及自动两种类型，可根据使用要求选择

- External electrode tube is made of 316L stainless steel; imported medium coating material is used for dielectric tube
- Negative pressure discharge technology is specially used for swimming pool water treatment; high targeted and high adaptability
- The heat regeneration feed gas treatment way creates high drying efficiency and good feed gas quality, which is more suitable for the humid and corrosive environment of swimming pool
- Patented enamel dielectric tube with features of high strength, good pressure resistance and good heat resistance; easier to be maintained
- Ozone capacity could be regulated with range of 10%-100%; high ozone concentration, large ozone capacity, more stable performance and longer life time
- Equipment has operation monitoring functions to current, voltage, temperature, flow rate, gas pressure and operation status and protection functions
- Control method includes manual control and automatic control for option

案例 Typical Projects

序号	客 户 名 称	臭氧规格	序号	客 户 名 称	臭氧规格
1	北京京铁文化宫	400g/h	13	石家庄残奥会游泳馆	100g/h
2	清华大学游泳馆（奥运会训练馆）	300g/h	14	中国建设银行培训中心	80g/h
3	三亚豪生大酒店	10-250g/h	15	湖南省委接待办游泳馆	80g/h
4	中国中央党校游泳馆	200g/h	16	内蒙古蒙牛集团	60g/h
5	国家质量检测中心南戴河游泳馆	200g/h	17	北京军区天津271医院	60g/h
6	深圳四中游泳馆	200g/h	18	广州威斯汀酒店（五星级）	40g/h
7	宁波鄞州游泳馆	200g/h	19	常州凤凰湖会所	40g/h
8	福建莆田体育馆	200g/h	20	晋中市灵山县国家广电总局	20g/h
9	河南濮阳迎宾馆	150g/h	21	平潭金井湾市民运动中心泳池	300g/h
10	湖北经济学院	120g/h	22	中国科技大学泳池改造	250g/h
11	北京检察院游泳馆	100g/h	23	上海欢乐谷水上乐园	400g/h
12	郑州七中	100g/h		……	

高浓度臭氧水
High Concentration Ozonated Water

臭氧水应用领域
Ozonated Water Application Areas

杀菌、消毒与净化、漂白 Sterilization, Disinfection and Purification, Bleaching

利用高浓度臭氧水对原材料物体表面进行过流式浸没杀菌，对管道、盛装容器、灌装线、包装材料等进行浸泡和冲洗，达到高效灭菌、无死角，避免使用其它化学消毒剂带来的有害物质排放及残留。

在水产品、坚果加工、肉食品加工过程中可用利用高浓度臭氧水代替传统氧化剂进行漂白、防腐、消毒。

High concentration ozonated water can be used for object surface of raw materials by the way of over-current immersion sterilization. ozonated water also can be used for soaking and flushing to pipeline, costumes container, filling line, packaging materials soaking and flushing to achieve efficient sterilization without dead angle. It avoids the the emissions of harmful substances and residues brought by other chemical disinfectants. In the processing of aquatic products, nuts and meat food, high concentration ozone water can be used for bleaching, corrosion protection and disinfection by replacing the traditional oxidizing agent.

水处理 Water Treatment

可广泛应用于生产用水的杀菌净化、养殖用水的杀菌防病，污水处理过程中的除臭、脱色、灭菌等工艺（如酿造工艺用水等）。

Ozonated water can be widely used in purification and sterilization of the production water supply and sterilization and disease prevention of cultivated water. It also can be used for deodorant, decolorization, sterilization and sterilization in sewage treatment. (such as the brewing process water, etc.).

农药降解、去毒 Pesticides Degrade and Detoxify

可以广泛应用于公共饮食食堂、果蔬加工厂、食品加工厂等处，用于去除农药、化肥、食品添加剂等有害物质。

Ozonated water can be widely used in public dining hall, fruit and vegetable processing plants, food processing plants, etc. for removing pesticides, fertilizers, food additives and other harmful substances.

绿色农业种植 Green Agriculture Planting

臭氧水作为一种新型代替农药的消毒杀菌剂，应用于温室大棚果蔬，花卉，药材等种植全过程中，对病害（如霜霉病、根腐病等）、对虫害（如根线虫、韭蛆等)均能有效杀灭，能很好地保障作物无公害绿色生长。

As a new model sterilizing agent, ozone water can be applied to greenhouse vegetables, flowers, herbs planting in the whole process by using different ways by replacing pesticides. It can effectively kill diseases(such as downy mildew, root rot, etc.) and insect pest (such as root nematode, chive maggot, etc.) so that it can make sure green growth of crop .

产品贮藏保鲜 Product Storage and Preservation

利用臭氧水对水产品、畜禽产品、果蔬产品进行清洗处理，均可以有效杀灭菌落，抑制细菌增殖速率且残留，感官、口感均得到一定保持，贮藏周期至少延长一倍以上。

Ozone water can be used for cleaning and processing of aquatic products, livestock products, fruits and vegetables products. It can effectively kill bacteria and inhibit bacterial proliferation rate and residual. It maintains a certain sensory and taste, and storage period at least more than double.

半导体清洗 Semiconductor Cleaning

利用高浓度臭氧水代替原有传统清洗法（如RCA）的大量化学试剂对半导体行业核心器件进行清洗（比如硅、锗等材料），可以取得更好的清洗效果及表面质量，可提高器件的品质和成品率，同时大大减少危害废液的产生。

The high concentration ozonated water do cleaning to the core device of semiconductor (such as silicon, germanium and other materials) by replacing the original traditional cleaning method (such as RCA) with a large number of chemical reagents. It can obtain the better cleaning effect and excellent surface quality, also greatly protect device quality and rate of finished products, meanwhile it also greatly reduce the hazardous waste generation.

生禽养殖 Poultry Animals Breeding

用臭氧水对养殖设施进行冲洗，可有效消灭病菌、病毒、除氨、除臭、驱蚊、驱蝇高效净化环境空间，饮用臭氧水可降低药物防疫的使用，促进健康生长，提高养殖效益。

Washing aquaculture facilities by using ozonated water can effectively destroy bacteria, viruses, remove ammonia, remove odor, kill mosquito and fly driving to purify the environment. Supply ozonated water for livestock and poultry drinking could reduce the use of drug, promote healthy growth and improve breeding efficiency.

产品介绍
Product Introduction

高浓度臭氧水机是采用独有的高效混合专利技术，由臭氧发生单元、臭氧吸收单元、臭氧多效混合单元、臭氧防倒流保护装置、尾气臭氧分解等装置组成，并采用集成化一体式设计，臭氧水溶浓度高,设备紧凑,占地小，安装操作便捷。

该设备可根据需求配置检测仪器可实现在线连续检测功能，能根据在不同时段、不同工况以及处理水量的变化情况下自动检测水溶浓度并可按需调整，以达到用户需求浓度的臭氧水。

High concentration ozonated water machine uses a unique high efficient mixing patent technology and generates high concentration ozonated water. The machine with integrated design is composed of ozone generating unit, ozone absorption unit, high efficient mixing unit, backflow prevention device and ozone tail gas decomposition device. The machine with compact structure makes installation and operation to be much easier. The machine can be configured with detecting instruments according to the demands to realize continuous detection function online. Ozone dissolved concentration could be automatically detected at different time, different conditions and different water treated flow rate and regulated based on requirements to achieve ozonated water demanded by customer.

产品系列和组成
Product Composition

- 臭氧发生单元
- 臭氧吸收单元
- 臭氧多效混合单元
- 臭氧防倒流装置
- 尾气臭氧破坏分解装置
- PLC及检测仪表（自控型配）

- Ozone generation unit
- Ozone absorption unit
- High efficient mixing unit
- Backflow prevention device
- Ozone tail gas decomposition device
- PLC and detection instruments (automatic control model)

高浓度臭氧水机参数表
High Concentration Ozone Water Machine Specifications

型 号 Model	气量 Feed gas flow	水溶臭氧浓度 Ozone concentration	冷却水流量 Cooling water flow rate	电源 Power supply	额定功率 Rated power rate	进出气口尺寸 Gas outlet size	冷却水口尺寸 Cooling water size	外形尺寸 Dimension	配套设备 Corollary equipment
	Nm^3/h	ppm	m^3/h	V/Hz	Kw			mm	
2T/h	0.40	0-25	0.08	220/50	2.00	G1/4"	ϕ25卫生级卡箍 ϕ25 Sanitary grade clamp	1100×600×1700	集成富氧气源及臭氧投加设备 Integrated oxygen source system & ozone dosing device
4T/h	0.80		0.16	380/50	4.50	G1/2"	ϕ38卫生级卡箍 ϕ38 Sanitary grade clamp	1100×800×1700	
6T/h	1.00		0.20		4.00				需外接氧气气源；集成臭氧投加设备 Only integrated ozone dosing device
12T/h	2.00		0.40		7.50		ϕ51卫生级卡箍 ϕ51 Sanitary grade clamp	1300×800×1700	
20T/h	3.00		0.60		9.50		ϕ76卫生级卡箍 ϕ76 Sanitary grade clamp		

说明：设备外形尺寸因产品升级会略有变化，具体以实物为准。此列表以外的其他产量机型可制做，使用有特殊要求可接受订制。
Instruction: The dimension in the technical parameter table is only for reference.Please make the material object as the standard.
Other production models other than these in above list can be made and also can be customized with special requirements.

GUOLIN®

产品特点
Product Characteristics

- 臭氧水量及臭氧水浓度可调，臭氧水混合效率高，浓度大
- 客户可实现不停机操作，间歇式用水模式，任意开关用水
- 内部设置防倒流保护装置，防止误操作损坏臭氧设备
- 内部设置气液自动分离装置，多余的尾气分离后进入尾气分解装置中分解成氧气后安全排放
- 臭氧发生器核心器件采用专利技术，臭氧产量大，臭氧浓度高，使用寿命长
- 设备具有电流、电压、温度、气体压力、运行状态等一系列运行监测与保护功能
- 设备分手动及自动两种类型，可根据使用要求选择，操作简单、使用便捷

- Ozonated water flow rate and ozone dissolved concentration can be regulated; high mixing efficiency and high ozone dissolved concentration
- Non-stop operation and intermittent water using mode, switch for using at any time
- Backflow prevention device is built inside to prevent broken of machine due to misoperation
- Internal gas-liquid automatic separation device separates tail gas and send it entering ozone decomposition device. Tail gas will be decomposed into oxygen for safety discharge
- Core device of ozone generator uses patented technology with features of large ozone capacity, high ozone concentration and long service life time
- Operation monitoring for current, voltage, temperature, gas pressure and running status and protection function
- Control method includes manual control and automatic control for option, easy to operate and convenient to use.

案例 Typical Projects

序号	客 户 名 称	臭氧规格	序号	客 户 名 称	臭氧规格
1	青岛灯塔酿造有限公司	15t/h	16	安徽新东方生物科技有限公司	2t/h
2	徐州开口香食品有限公司	2t/h	17	北京万生人和科技有限公司	2t/h
3	国家农产品保鲜工程技术研究中心	2t/h	18	青岛饭仓食品有限公司	2t/h
4	清华大学核能与新能源技术研究院	2t/h	19	厦门中药厂	4t/h
5	辽宁深山食品有限公司	2t/h	20	温氏集团	4t/h
6	山东久发食用菌股份有限公司	1t/h	21	湖北神鹭水产品	2t/h
7	新疆紫罗兰餐饮有限公司	2t/h	22	湖南益阳顺祥食品有限公司	2t/h
8	重庆辣媳妇食品有限公司	2t/h	23	青岛力创食品有限公司	1t/h
9	青岛国林海产食品有限公司	4t/h	24	河南信阳弘润冷冻加工有限公司	1t/h
10	新疆吐鲁番果业有限公司	2t/h	25	青岛大石樱桃酒业有限公司	1t/h
11	南昌奥美医疗器械有限公司	1t/h	26	荣成市好之好食品有限公司	2t/h
12	陕西禾益现代观光农业科技开发有限公司	1t/h	27	北京密云农改水项目	1t/h-4t/h
13	晶叶（青岛）生物科技有限公司	4t/h	28	青岛联盛益康食品科技有限公司	2t/h
14	千禾味业食品有限公司	10t/h	29	重庆聚立信生物工程有限公司	2t/h
15	哈尔滨恩彩食品有限公司	2t/h		……	

水产养殖
Aquaculture

随着工业化封闭式循环水养殖设备的推广和应用，高密度、小水体的水产养殖对水质的要求也更加严格。在日本及欧美等大部分国家已在水产养殖中广泛采用臭氧消毒工艺， 同时禁止含氯素过高的水产品进入市场。因此国内养殖公司已在鱼、虾、蟹、海参等高端养殖产业中，推广更具高效、快速杀菌特点的臭氧消毒工艺进行水质处理技术。

With the popularization and application of industrial closed circulation aquaculture equipment, high density and small water body aquaculture has more stringent requirements on water quality. Ozone disinfection has been widely used in aquaculture in Japan, Europe and the United States and other countries, and the aquatic products containing too much chlorine have been banned from entering the market. Therefore, domestic breeding companies have been in the fish, shrimp, crab, sea cucumber and other high-end breeding industry, promote more efficient, rapid sterilization characteristics of ozone disinfection process for water treatment technology.

畜禽养殖
Poultry Breeding

在畜牧养殖中畜禽场所环境及生产用水中含有大量的致病菌、传染病毒、重金属、农药残留等多种有害物质，极易引起畜牧各种疾病。 养殖专用臭氧发生器设备，它可以高效彻底地杀灭环境空间及水中的病原微生物，清除有害物质，提高活氧含量。臭氧在反应过程中不产生二次污染。使用臭氧技术可大大减少人力投入和化学药物和抗生素的使用。

There are a lot of pathogenic bacteria, infectious virus, heavy metals, pesticide residues and other harmful substances in the environment and production water of livestock breeding, which can easily cause various diseases in livestock breeding. Breeding special ozone generator equipment, it can efficiently and completely kill the pathogenic microorganisms in the environment space and water, remove harmful substances, improve the content of live oxygen. Ozone does not produce secondary pollution during the reaction. The use of ozone technology can greatly reduce manpower and the use of chemicals and antibiotics.

农业种植
Agriculture

温室大棚中温度高，湿度大，多种病原真菌、细菌极易大量繁殖；在专业化种植基地，其土壤中各种病虫害逐年积累，而长期使用高毒、高剂量农药，不仅对生产人员产生危害、对环境产生极大污染，也提高了作物的种植成本。同时长期使用农药会导致病虫产生抗药性，大剂量农药更导致了蔬菜农药大量的残留，影响蔬菜品质与安全。

使用臭氧高浓度水采用不同方式（灌溉、种子浸泡、叶颈喷洒）应用于各类农产品种植全过程，对霜霉病、灰霉病、白粉病、根腐病、黄瓜猝倒病、番茄青枯病、辣椒疫病等各种病害；根线虫、韭蛆、烟粉虱、瓜蚜等各种害虫及其虫卵均有较高的灭杀和防治效果，同时降低种植成本。

The temperature and humidity in the greenhouse are high, and a variety of pathogenic fungi and bacteria are easy to multiply. In specialized planting bases, all kinds of diseases and insect pests in the soil accumulate year by year, while long-term use of high-toxic and high-dose pesticides not only causes harm to production personnel and great pollution to the environment, but also increases the cost of crop cultivation. At the same time, long-term use of pesticides will lead to drug resistance of pests and diseases, and large doses of pesticides will lead to a large number of pesticide residues in vegetables, affecting the quality and safety of vegetables.
High-concentration ozonized water was used in the whole process of various agricultural products (irrigation, seed soaking, leaf neck spraying) to treat various diseases such as downy mildew, grey mildew, powdery mildew, root rot, cucumber quenching, tomato bacterial wilt, pepper blight, etc. Various pests such as root nematode, leek, bemisia tabaci, aphid and their eggs have higher killing and control effect, and lower planting cost.

GUOLIN®

客户服务
Customer Service

客服中心 设有400和800全国售后服务专线，采用区域服务负责制，在北京、上海、广东、山东、江苏、西安、新疆等地设有固定联络点。
售后服务专线：400-6532-616 / 800-8600-113

The customer service center has 400 and 800 national after-sales service special hotlines. It adopts the regional service responsibility system, and has fixed contact points in Beijing, Shanghai, Guangdong、Shandong、Jiangsu、xi'an、Xinjiang and other places.
After sales service hotline: 400-6532-616 / 800-8600-113

7×24全年无休服务。我们拥有专业售后服务团队、臭氧系统专用服务车，为您提供“2小时快速响应，24到达现场”的用心服务。
We supply 7×24hrs all year service. We have a professional after-sales service team, ozone system special service vehicle, to provide domestic customer with "2-hour quick response, 24-hour on-site" attentive service.

智能主动服务。我们建立了完善的客户服务档案,通过管理平台，为您提供积极主动服务。
We supply intelligent active service. We have established a complete customer service file, and provide customers with active service through the management platform.

专家贴心服务。我们与国内的臭氧运行及应用技术专家长效合作，建立常态化的全国流动服务体系，足迹遍布全国各地，协同为您提供增值的技术和咨询服务。
We supply expert attentive service. We have a long-term cooperation with domestic experts in ozone operation and application technology and establish a normalized national mobile service system with footprints all over the country, which could provide customer with value- added technology and consulting services.
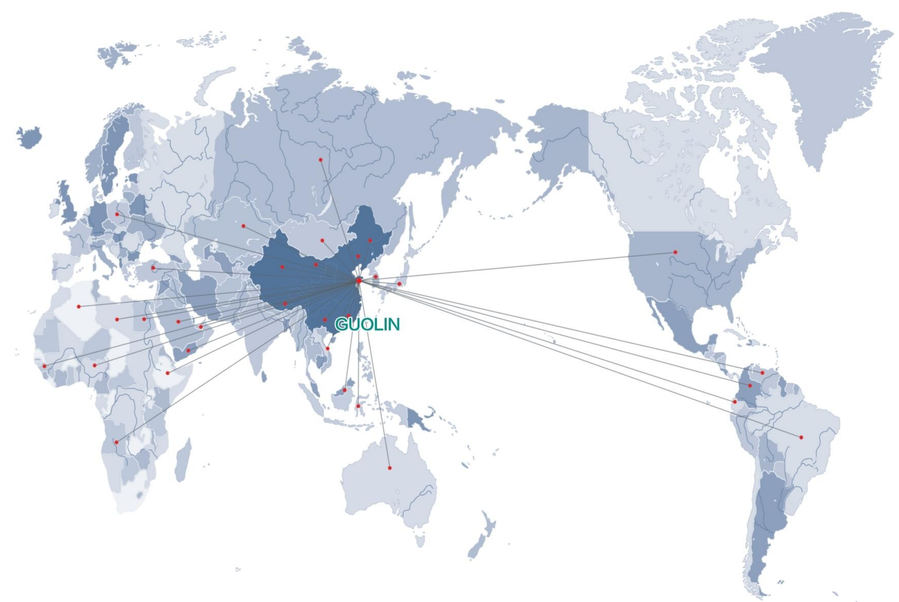
升级改造服务。我们致力于臭氧发生器技术的不断创新、进步，为确保臭氧系统能更好的稳定运行，我们可以协同您对臭氧发生系统中相关设备进行升级改造，为您解决后顾之忧。
We supply upgrading service. We are committed to the continuous innovation and progress of ozone generator technology. In order to ensure a better and stable operation of the ozone system, we can cooperate with customer to upgrade the relevant equipment in the ozone generation system and solve your worries.